REV	DESCRIPTION	DRAWN	DATE
		APPROVED	DATE
C	REDRAWN W/O CHG	R.GLOOR	3/04

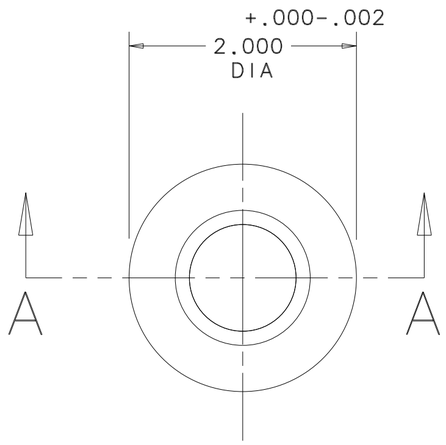

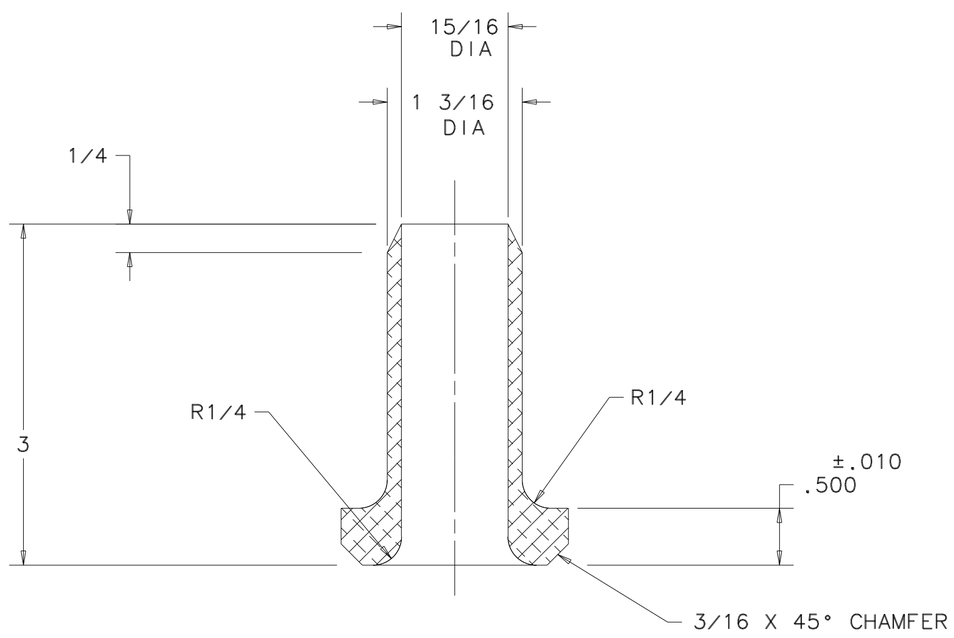

SECTION A-A

UNLESS OTHERWISE SPECIFIED			ORIGINATOR	RFN	02-FEB-1986
FRACTIONS	DECIMALS	~	DRAWN	RGH	02-FEB-1986
± 1/32	± .005	±	CHECKED	RGH	02-MAR-1986
1. BREAK ALL SHARP EDGES .015 MAX. 2. DO NOT SCALE DRAWING. 3. DIMENSIONS BASED UPON ANSI Y14.5M-1982 4. MAX. ALL MACH. SURFACES			APPROVED	RFN	03-MAR-1986
			USED ON	ME-70853 -	
			MATERIAL	ALUMINUM -	

FERMI NATIONAL ACCELERATOR LABORATORY
UNITED STATES DEPARTMENT OF ENERGY

FAST KICKER MAGNET COVER PLATE STRESS CONE

SCALE	DRAWING NUMBER	SHEET	REV
FULL	0350.090-MC-70854	1 OF 1	C

CREATED WITH : Ideas9m3 GROUP: BEAMS DIV. MECH. SUPPT.