REV	DESCRIPTION	DRAWN	DATE
		APPROVED	DATE
A	REDRAWN W/O CHG	R.GLOOR	2/04

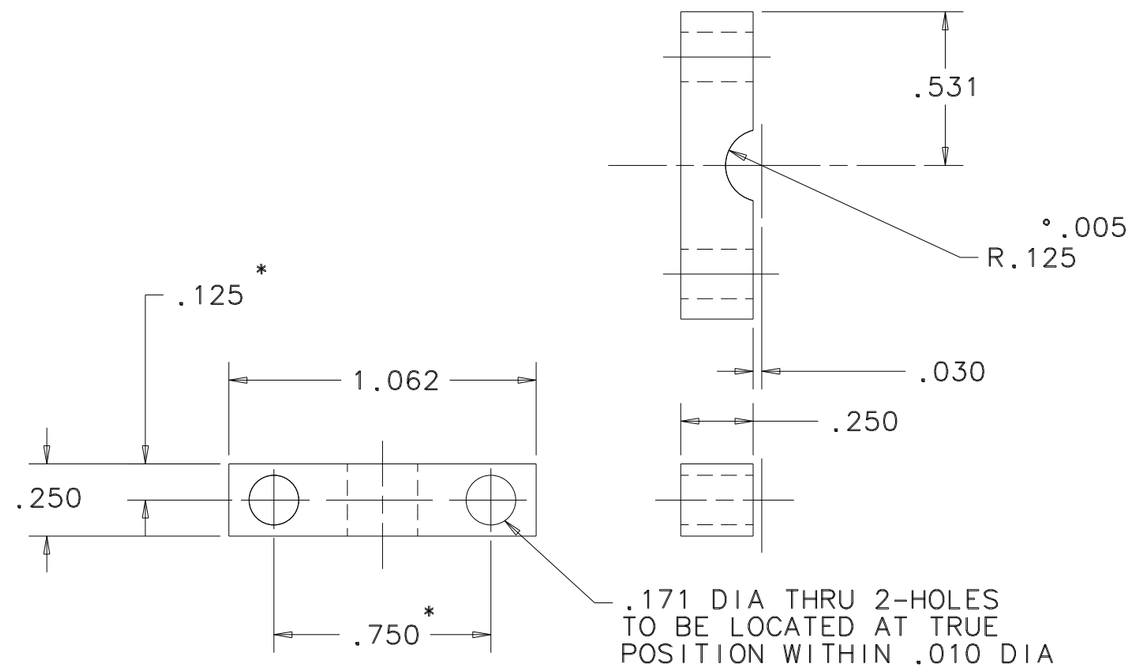

1.(*) TRUE POSITION DIMENSION

NOTE:

UNLESS OTHERWISE SPECIFIED			ORIGINATOR	HJS	02-FEB-1970
FRACTIONS	DECIMALS	ANGLES	DRAWN	RGH	02-FEB-1970
± -	± .010	± -	CHECKED	RGH	03-MAR-1970
1. BREAK ALL SHARP EDGES .015 MAX. 2. DO NOT SCALE DRAWING. 3. DIMENSIONS BASED UPON ANSI Y14.5M-1982 4. MAX. ALL MACH. SURFACES 63			APPROVED	HJS	03-MAR-1970
			USED ON	ME-70855	
			MATERIAL	COPPER (ASTM B 133)	

FERMI NATIONAL ACCELERATOR LABORATORY
UNITED STATES DEPARTMENT OF ENERGY

WIRE CLAMP
FAST KICKER MAGNET

SCALE	DRAWING NUMBER	SHEET	REV
2X	0350.090-MB-6526	1 OF 1	A

CREATED WITH : Ideas9m3 | GROUP: BEAMS DIV. MECH. SUPPT.