REV	DESCRIPTION	DRAWN / APPROVED	DATE / DATE
F	1.730 WAS 1.771;ADD 1.000 DIM;REDRAWN	R.GLOOR	2/04

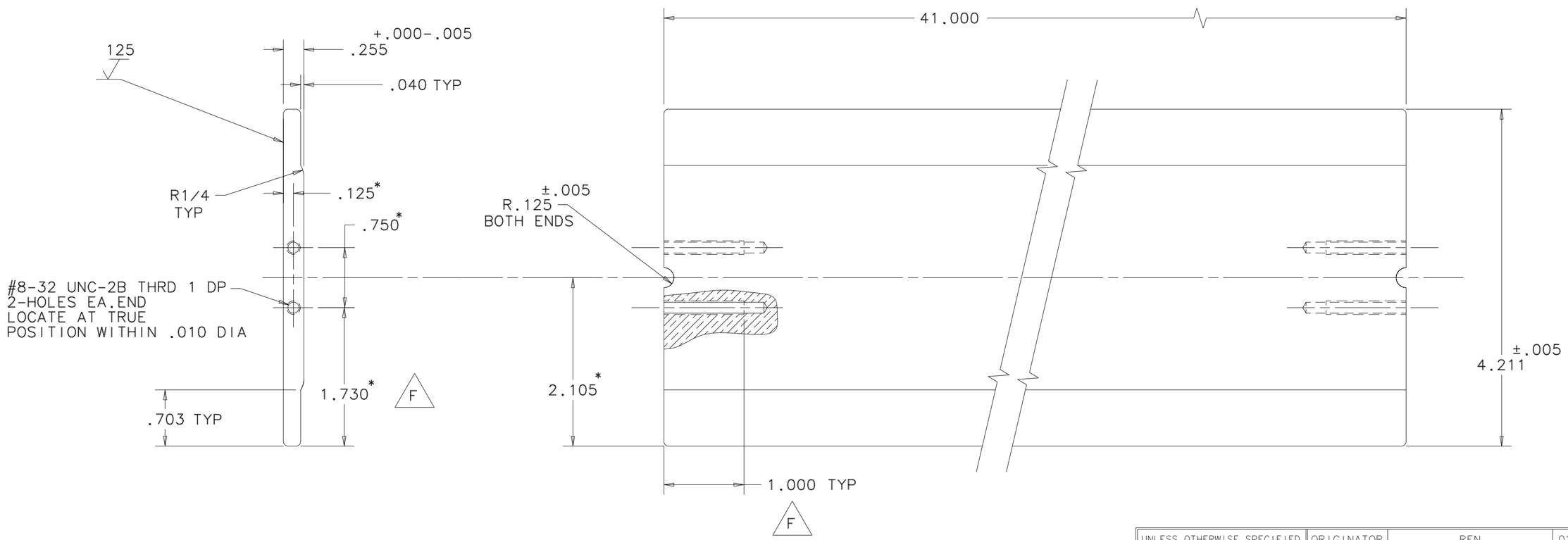

UNLESS OTHERWISE SPECIFIED			ORIGINATOR	RFN	02-FEB-1970
FRACTIONS	DECIMALS	ANGLES	DRAWN	RGH	02-FEB-1970
± 1/16	± .015	± 1°	CHECKED	RGH	03-MAR-1970
1. BREAK ALL SHARP EDGES .015 MAX. 2. DO NOT SCALE DRAWING. 3. DIMENSIONS BASED UPON ANSI Y14.5M-1982 4. MAX. ALL MACH. SURFACES 125			APPROVED	RFN	03-MAR-1970
			USED ON	ME-70855	
			MATERIAL	COPPER (ASTM B-133)	

FERMI NATIONAL ACCELERATOR LABORATORY
UNITED STATES DEPARTMENT OF ENERGY

CENTER CONDUCTOR FAST KICKER MAGNET

SCALE	DRAWING NUMBER	SHEET	REV
FULL	0350.090-MC-6523	1 OF 1	F

CREATED WITH : Ideas9m3 | GROUP: BEAMS DIV. MECH. SUPPT.

NOTES:

1. (*) TRUE POSITION DIMENSION