REV	DESCRIPTION	DRAWN	DATE
		APPROVED	DATE

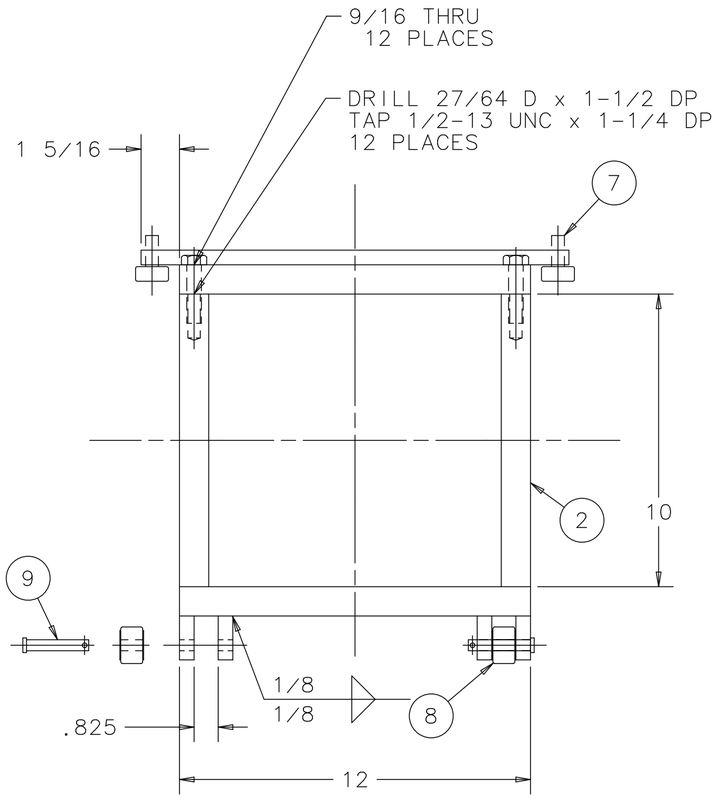

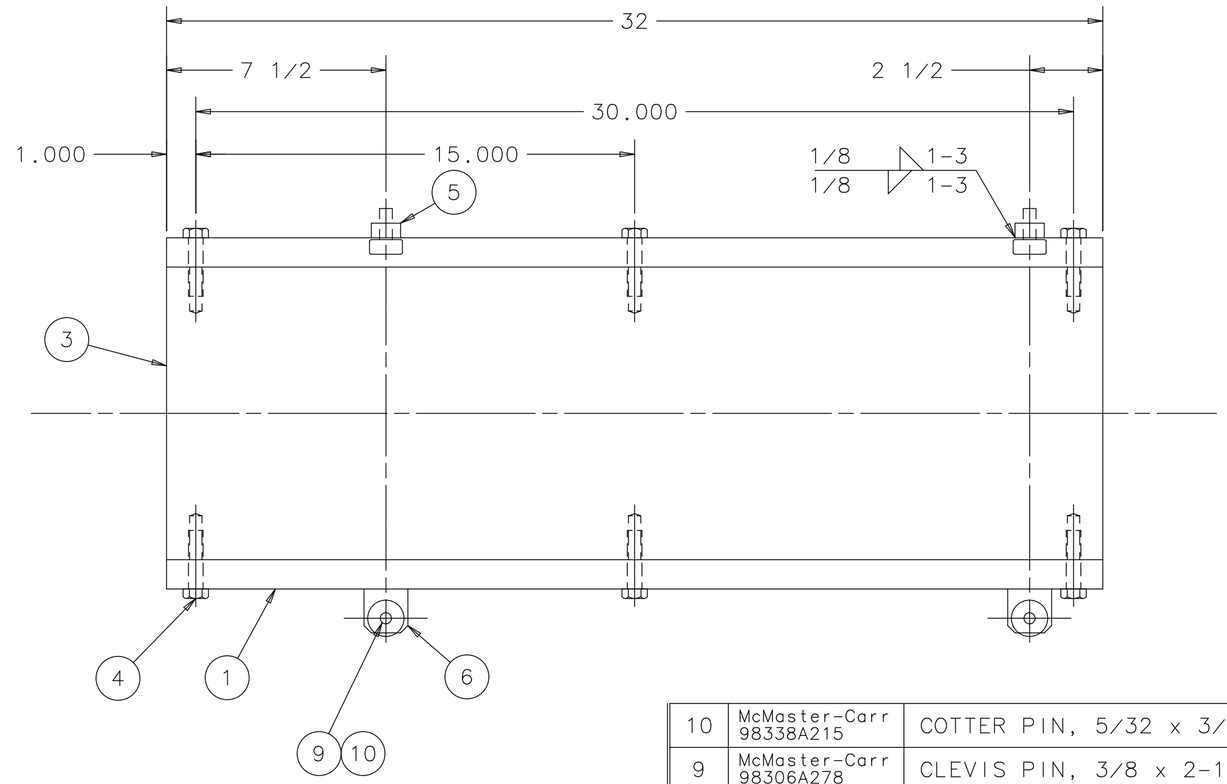

ITEM	PART NO.	DESCRIPTION OR SIZE	QTY.
10	McMaster-Carr 98338A215	COTTER PIN, 5/32 x 3/4	4
9	McMaster-Carr 98306A278	CLEVIS PIN, 3/8 x 2-1/8	4
8	McMaster-Carr 6326K63	TRACK ROLLER 1.25 D x 3/8 ID	4
7	McMaster-Carr 5977K78	STUD TRACK ROLLER 1.125 D	4
6		CRS BAR 1/2 x 1-1/2 x 1-1/2	8
5		CRS BAR 1/2 x 1 x 14-5/8	2
4		1/2-13 x 2 HEX HEAD BOLT	12
3		GRAPHITE BLOCK 10 x 10 x 32	1
2		CRS PLATE 1 x 10 x 32	2
1		CRS PLATE 1 x 12 x 32	2

PARTS LIST

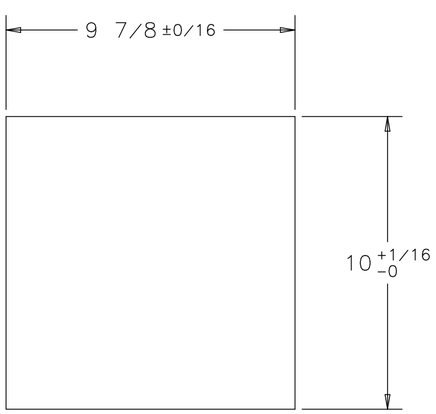

GRAPHITE BLOCK
Length 32" +/- 1/16

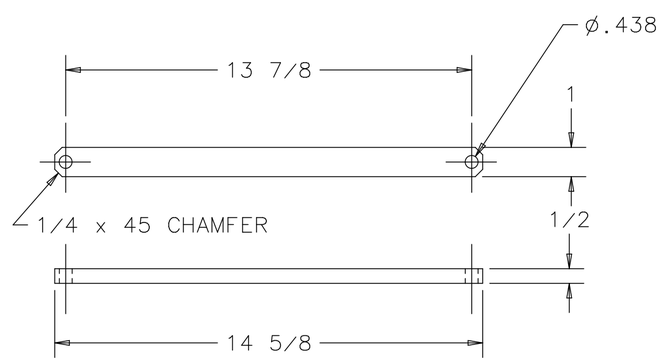

DETAIL ITEM 5

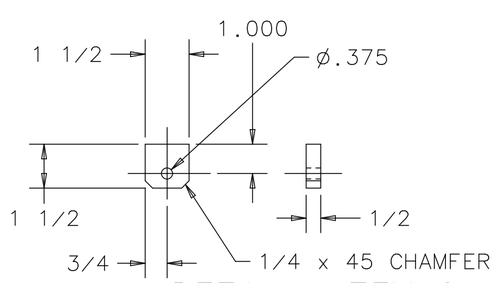

DETAIL ITEM 6

STEEL SHIELDING 1" CRS
PAINTED BLUE
GRAPHITE BLOCK INSIDE

NOTICE: IMAGE OBTAINED FROM FERMILAB WEB SITE

This information is provided for REFERENCE use only.
Not for MANUFACTURE, or DESIGN INFORMATION.
All information contained in this document represents work sponsored by an agency of the U.S. Government.
Neither the U.S. Government nor any agency thereof, nor Universities Research Association, Inc., nor any of their employees or officers, makes any warranty, express or implied, or assumes any legal liability or responsibility for the accuracy, completeness, or usefulness of any information, apparatus, product or process disclosed, or represents that its use would not infringe privately owned rights.

UNLESS OTHERWISE SPECIFIED			ORIGINATOR	R.REILLY	20-MAR-2008
DECIMALS	FRACTIONS	ANGLES	DRAWN	D.SCHMITT	20-MAR-2008
± .010	± 1/64	±1/2°	CHECKED	R.REILLY	25-MAR-2008
			APPROVED	R.REILLY	25-MAR-2008

1. BREAK ALL SHARP EDGES 1/64 MAX.
2. DO NOT SCALE DRAWING.
3. DIMENSIONS BASED UPON ASME Y14.5M-1994
4. MAX. ALL MACH. SURFACES 125
5. DRAWING UNITS: U.S. INCH

USED ON: MD-337731

MATERIAL: SEE PARTS LIST

FERMI NATIONAL ACCELERATOR LABORATORY
UNITED STATES DEPARTMENT OF ENERGY

MAIN INJECTOR 8GEV EXTRACTION DUMP GRAPHITE PLUG ASSEMBLY

SCALE	DRAWING NUMBER	SHEET	REV
1:4	9510.000-MC-463187	1 OF 1	

CREATED WITH : Ideas12NXSeries | GROUP: ACCELERATOR MECH. SUPPT.