REV	DESCRIPTION	DRAWN	DATE
		APPROVED	DATE
A	ADDED GRAPHITE PLUG, ADDED 10-14, CHANGED STEEL PLUG	D.SCHMITT	20-MAR-2008
		R.REILLY	25-MAR-2008

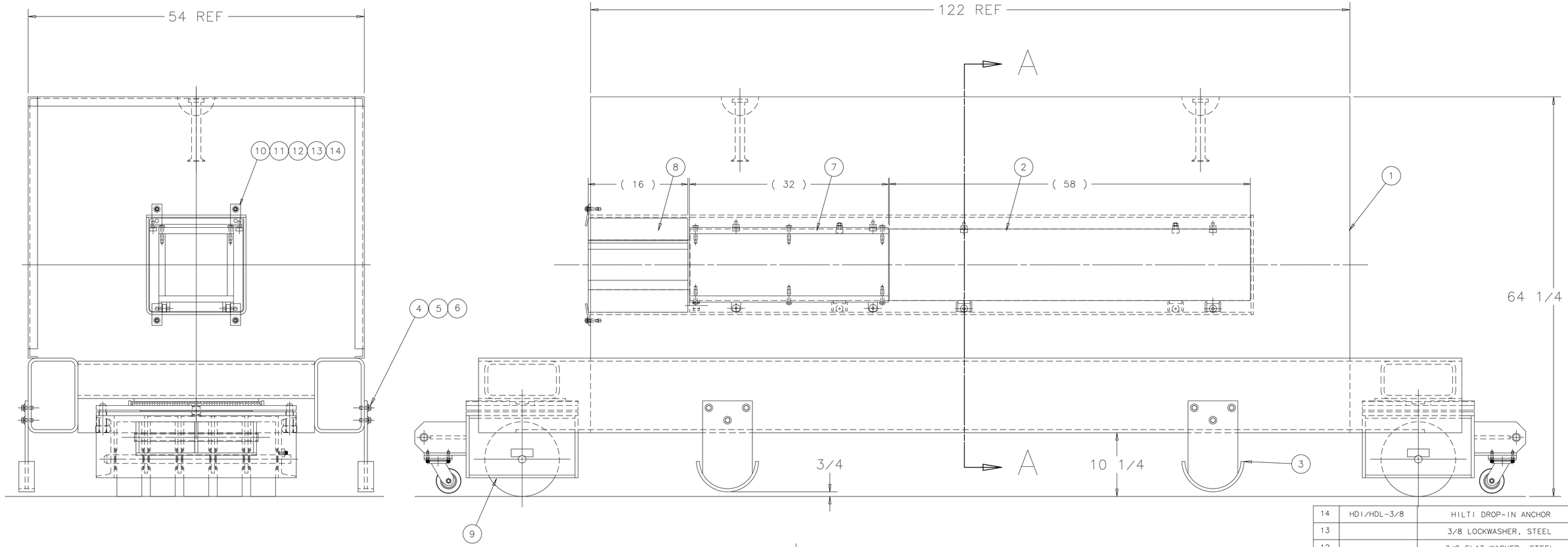

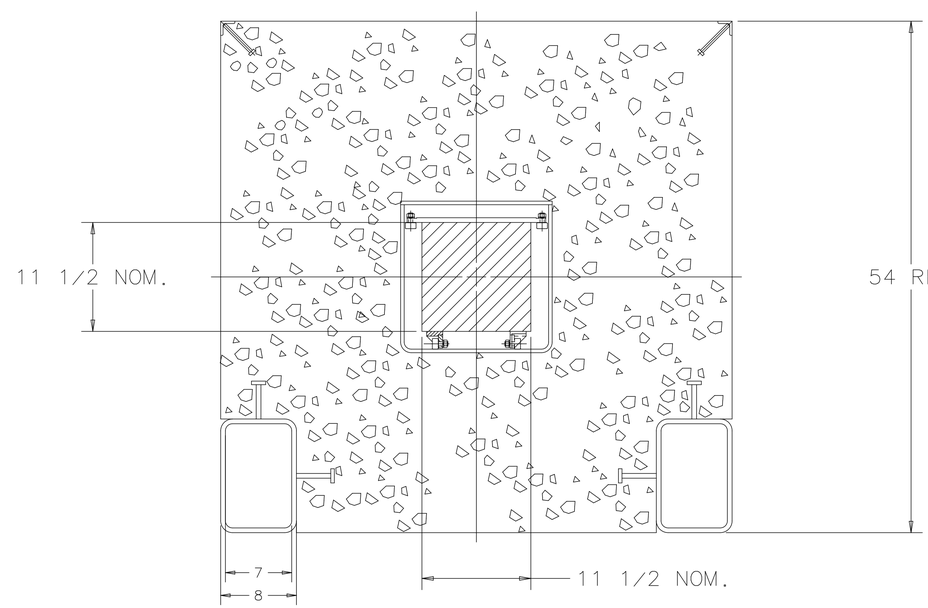

SECTION A-A

14	HDI/HDL-3/8	HILTI DROP-IN ANCHOR	4
13		3/8 LOCKWASHER, STEEL	4
12		3/8 FLAT WASHER, STEEL	4
11		3/8-16 UNC-2A x 2" HEX HD BOLT, STEEL	4
10	B129	B-LINE 2 HOLE SPLICE PLATE	4
9	MD-305963	WHEEL ASSEMBLY	2
8	MB-463188	STEEL INSERT ASSEMBLY	1
7	MC-463187	GRAPHITE PLUG ASSEMBLY	1
6		1/2 LOCKWASHER, STEEL	12
5		1/2 FLAT WASHER, STEEL	12
4		1/2-13 UNC-2A x 1 1/2 HEX HD BOLT, STEEL	12
3	MC-337736	OUTRIGGER	4
2	MD-337735	STEEL BLOCK	1
1	MD-337734	CONCRETE FINAL FINISHING	1

UNLESS OTHERWISE SPECIFIED

± ± ±

1. BREAK ALL SHARP EDGES MAX.
2. DO NOT SCALE DRAWING.
3. DIMENSIONS BASED UPON ASME Y14.5M-1994
4. MAX. ALL MACH. SURFACES ✓
5. DRAWING UNITS: U.S. INCH

ORIGINATOR	L.SAUER	01-AUG-1996
DRAWN	S.OPLT	11-NOV-1996
CHECKED	L.SAUER	11-NOV-1996
APPROVED	L.SAUER	11-NOV-1996

USED ON

MATERIAL
SEE PARTS LIST

FERMI NATIONAL ACCELERATOR LABORATORY
UNITED STATES DEPARTMENT OF ENERGY

MAIN INJECTOR 8GEV BEAM DUMP ASSEMBLY

SCALE	DRAWING NUMBER	SHEET	REV
1:8	9513.000-MD-337731	1 OF 1	A

CREATED WITH : Ideas12NXSeries GROUP: ACCELERATOR MECH. SUPPT.

NOTICE: IMAGE OBTAINED FROM FERMILAB WEB SITE

This information is provided for REFERENCE use only. Not for MANUFACTURE, or DESIGN INFORMATION. All information contained in this document represents work sponsored by an agency of the U.S. Government. Neither the U.S. Government nor any agency thereof, nor Universities Research Association, Inc., nor any of their employees or officers, makes any warranty, express or implied, or assumes any legal liability or responsibility for the accuracy, completeness, or usefulness of any information, apparatus, product or process disclosed, or represents that its use would not infringe privately owned rights.