REV.	DESCRIPTION	DRAWN	DATE
		APPD.	DATE

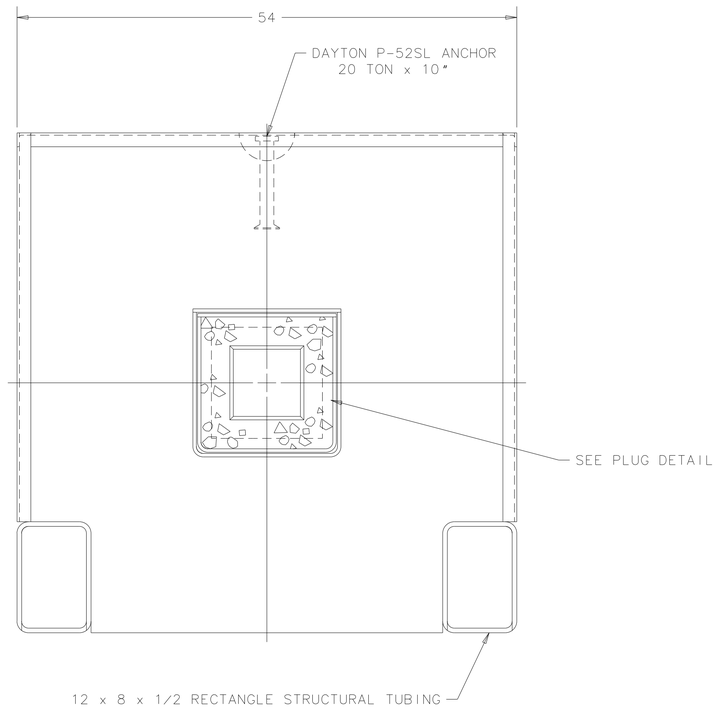

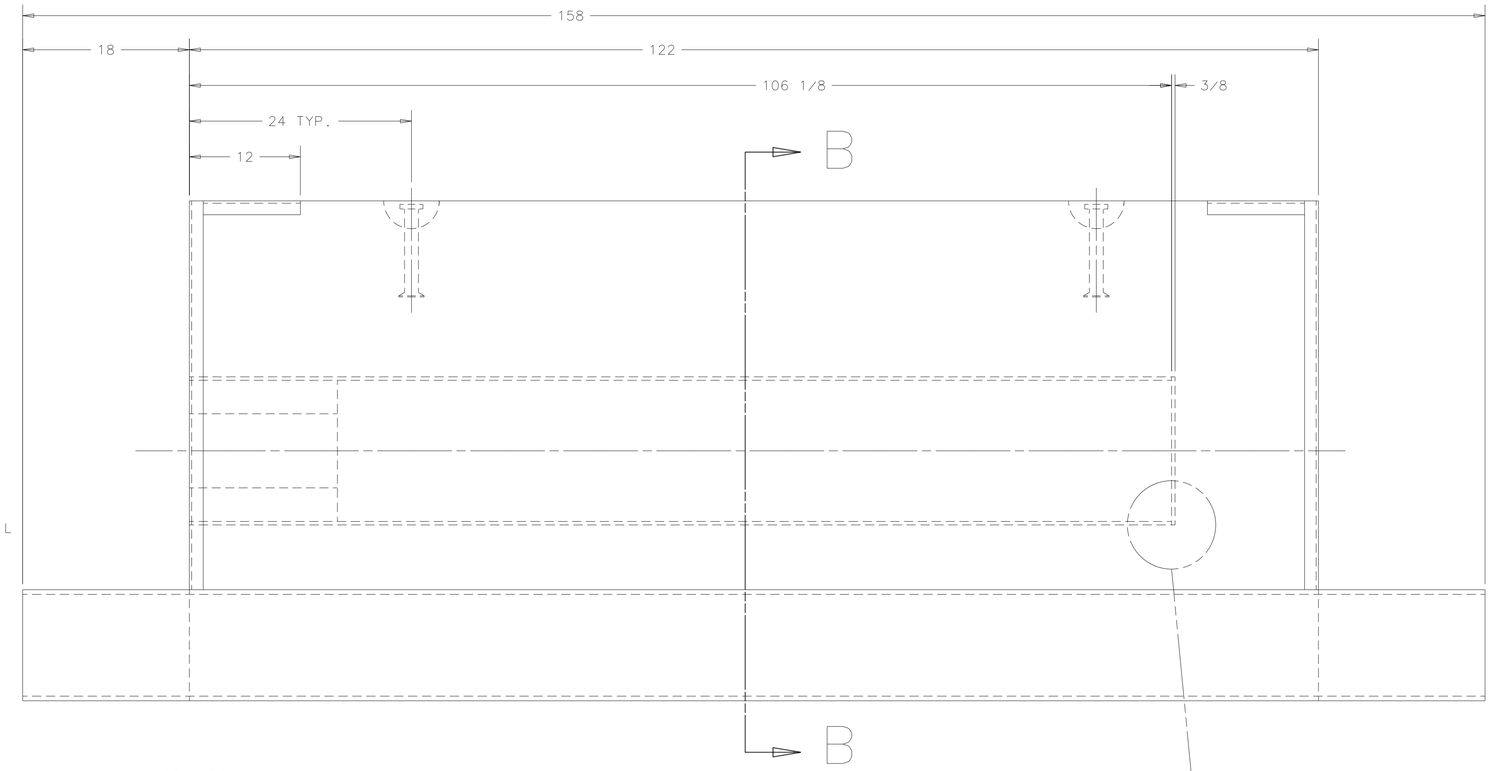

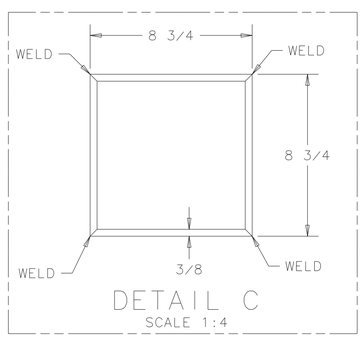

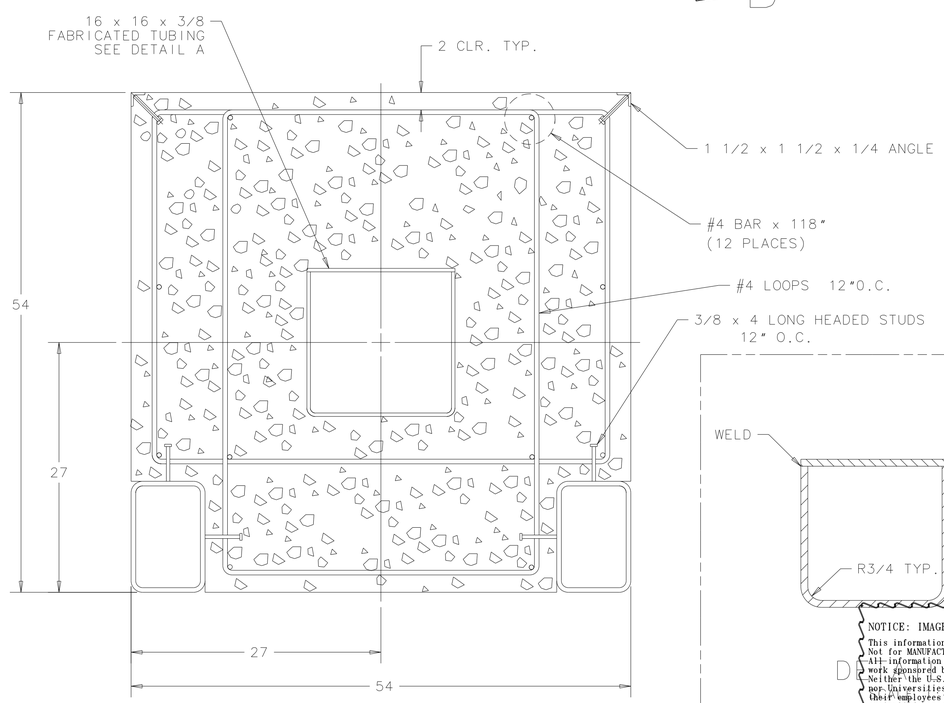

SECTION B-B

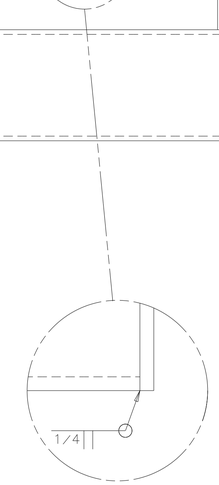

*MUST EASILY SLIDE INSIDE
16 x 16 x 3/8 TUBING

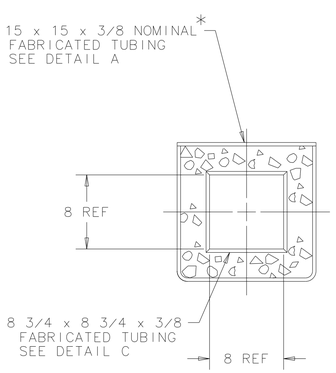

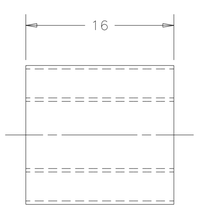

PLUG DETAIL

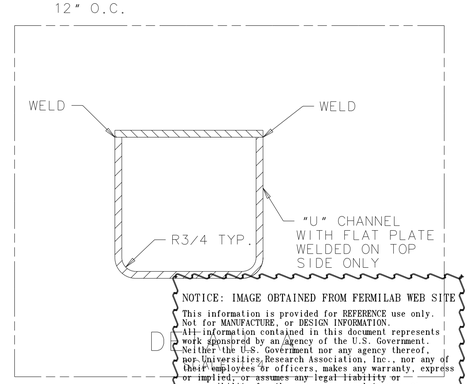

D

NOTICE: IMAGE OBTAINED FROM FERMILAB WEB SITE
This information is provided for REFERENCE use only. Not for MANUFACTURE, or DESIGN INFORMATION. All information contained in this document represents work sponsored by an agency of the U.S. Government. Neither the U.S. Government nor any agency thereof, nor Universities Research Association, Inc., nor any of their employees or officers, makes any warranty, express or implied, or assumes any legal liability or responsibility for the accuracy, completeness, or usefulness of any information, apparatus, product or process disclosed, or represents that its use would not infringe privately owned rights.
LAPIT 337644.dwg

ITEM	PART NO.	DESCRIPTION OR SIZE	QTY.

PARTS LIST

UNLESS OTHERWISE SPECIFIED			ORIGINATOR	L.SAUER	8-96
FRACTION	DECIMAL	ANGLES	DRAWN	S.WESSELN	9-5-96
± 1/8	±	±	CHECKED		
1. BREAK ALL SHARP EDGES 1/64 MAX.			APPROVED		
2. DO NOT SCALE DRAWING.			USED ON	MD-337734	
3. DIMENSIONS BASED UPON ANSI Y14.5M-1982					
4. MAX. ALL MACH. SURFACES			MATERIAL		

FERMI NATIONAL ACCELERATOR LABORATORY
UNITED STATES DEPARTMENT OF ENERGY

MAIN INJECTOR
8GEV BEAM DUMP
CONCRETE

SCALE	FILMED	DRAWING NUMBER	REV.
1:8		9513-MD-337644	

CREATED WITH I-DEAS_VI | USER NAME: WESSELN